Lecture 4:
Keypad Encoder, Comparators, and PWM

Emad Samuel Malki Ebeid

Summary of lecture 3

Signal and Variables

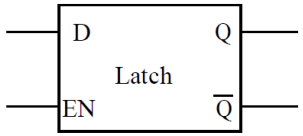

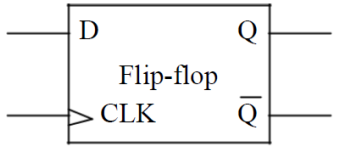

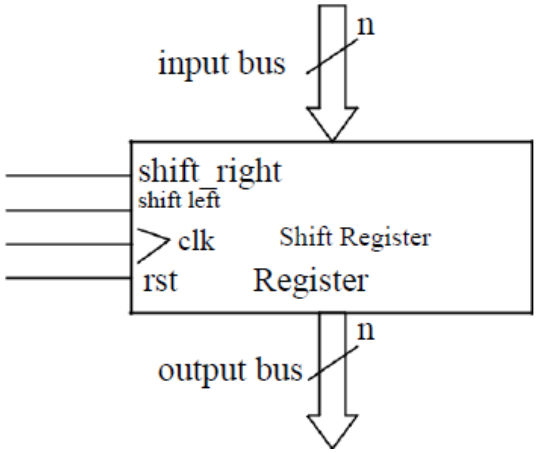

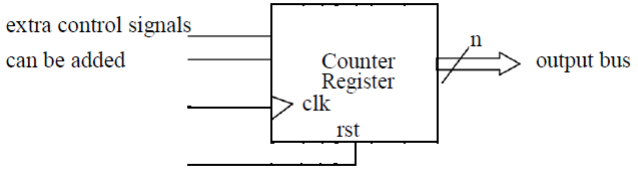

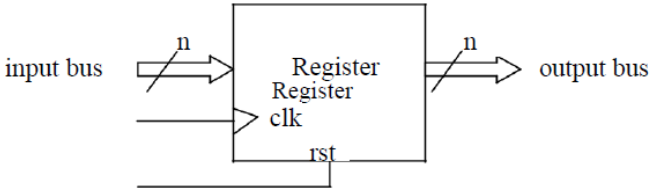

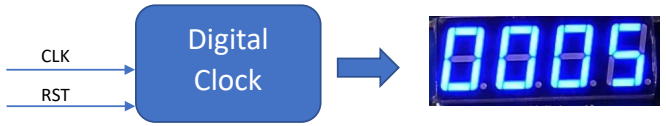

Keypad Encoder

- It is a device that acts as the link between a keypad and a digital device.
- Its primary function is to provide a digital output equal to the key is pressed on the keypad.

Keypad encoder

Key pressed (e.g., 0001)

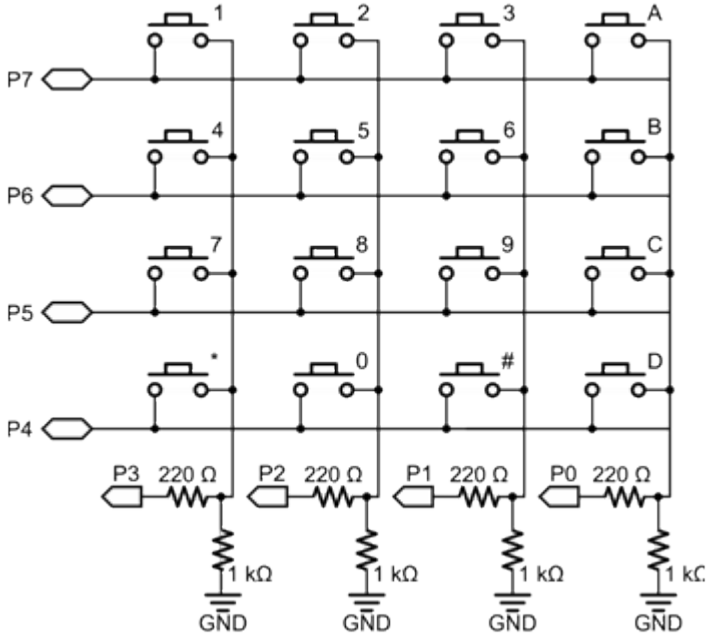

Block diagram

TBA

Comparators

Operators	VHDL
Equality & Relational	=
	/=
	<
	<=
	>
	>=
Logical	not
	and
	or

- A comparator compares two or more inputs using one, or a number of different comparisons.
- When the given relationship(s) is true, an output signal is given (logic 0 or logic1).
- Comparators are only modeled using the **if** statement with an **else** clause and no **else-if** clauses.
- Any two data objects are compared using equality and relational operators in the expression part of the if statement. Only two data objects can be compared at once, that is, statements like "**if** (a = b = c)" cannot be used.
- However, logical operators can be used to logically test the result of multiple comparisons, for example, "**if** ((a = b) and (a = c))".
- The single bit output is at logic '1' when the two n-bit input buses are the same, otherwise it is at logic '0'.

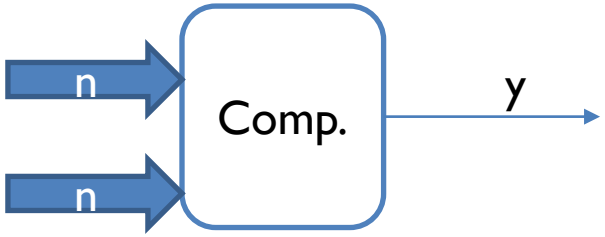


```
entity comp is
    Port ( a : in STD_LOGIC_VECTOR (3 downto 0);
           b : in STD_LOGIC_VECTOR (3 downto 0);
           y : out STD_LOGIC);
end comp;

architecture Behavioral of comp is

begin
    process(a,b)
        begin
            if(a=b) then y <='1';
            else y<='0';
            end if;
        end process;

end Behavioral;
```

Complex comparator

- std_logic_vector type does not indicate a value of the bus. To compare two buses, unsigned or signed types are used as comparison must be preformed between signals or variables that have a defined values.
- Example:
  - a,b,c,d,e,f are unsigned

```
process (a, b, c, d, e, f)
begin
  if (a = b and (c /= d or e >=f))
    then y <= '1';
  else
    y <= '0';
  end if;
end process;
```

*Extra parentheses enclosing "c /= d **or** e >= f" means that either one of these conditions and "a = b" must be true for the output to be at logic 1.

Communication technologies

- Analog and digital communication

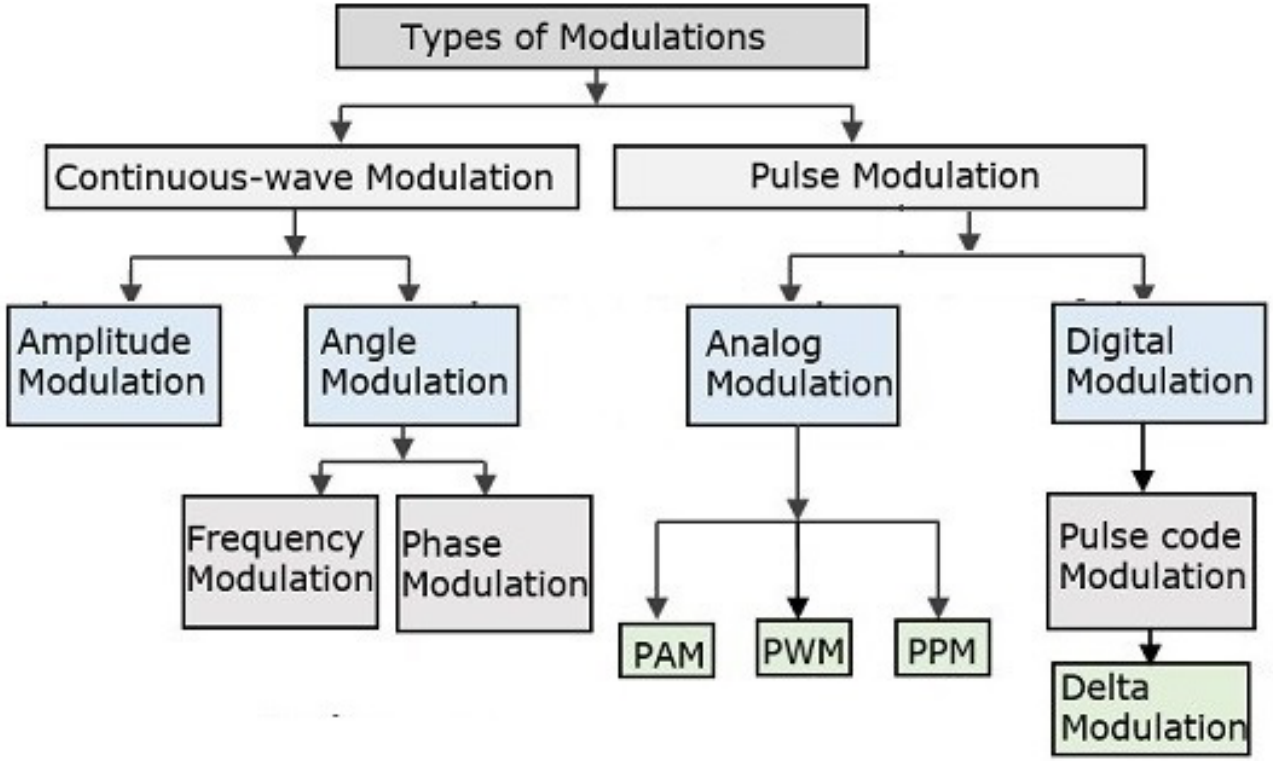

SYDDANSKUNIVERSITET.DK

Pulse-width modulation (PWM)

PWM signal

- PWM shows how much time the signal is high in an analog fashion.
- The signal “t_{on}“ is considered when the signal is high.
- To describe the amount of "t_{on}", the concept of duty cycle is used.
- The duty cycle is the percentage of time a digital signal is on over an interval or period of time.

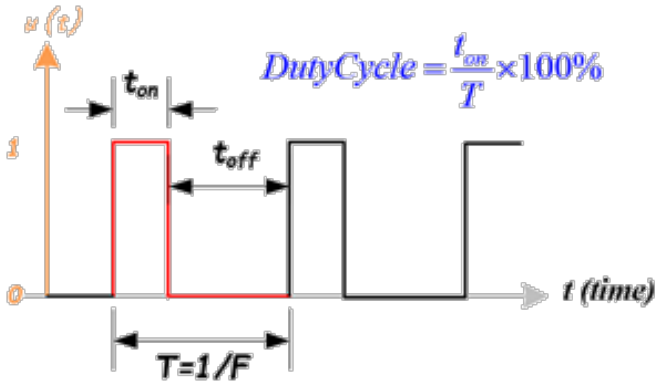

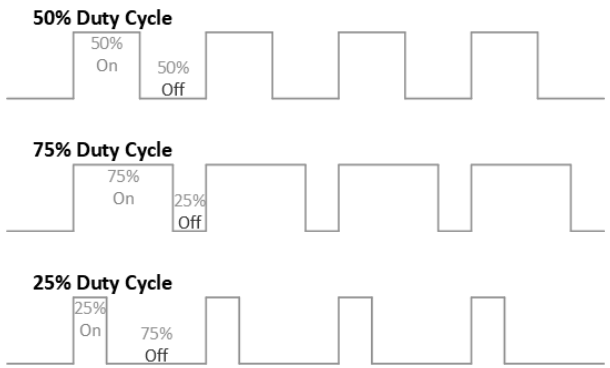

Building PWM signal

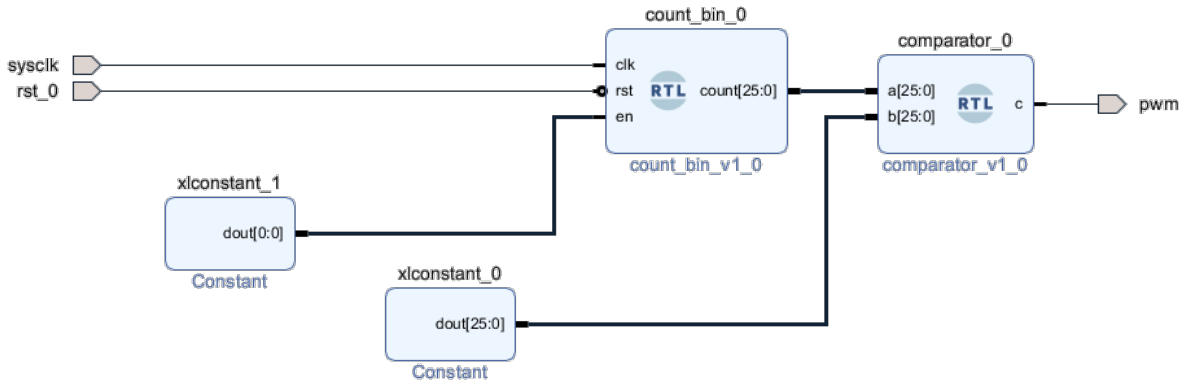

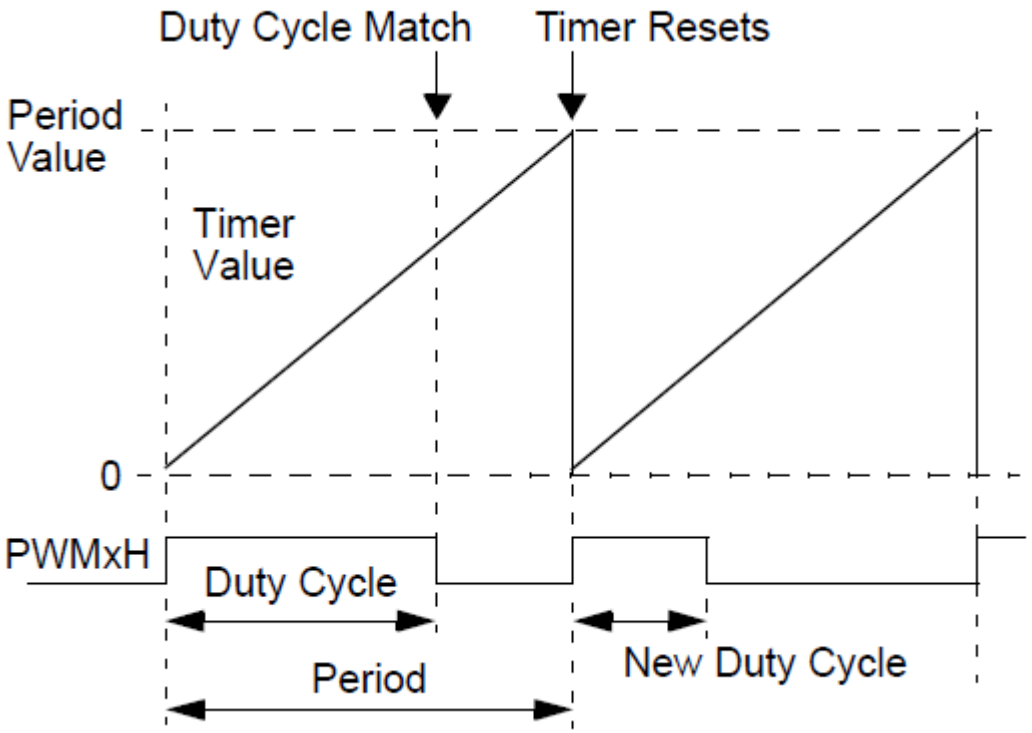

Excercise

- How many counter bits are needed to generate a PWM signal that has a 1Hz frequency out of a 125MHz clock signal?
- Which is the comparator threshold value for generating a PWM with 50% duty cycle?
- Which is the comparator threshold value for generating a PWM with 10% duty cycle?

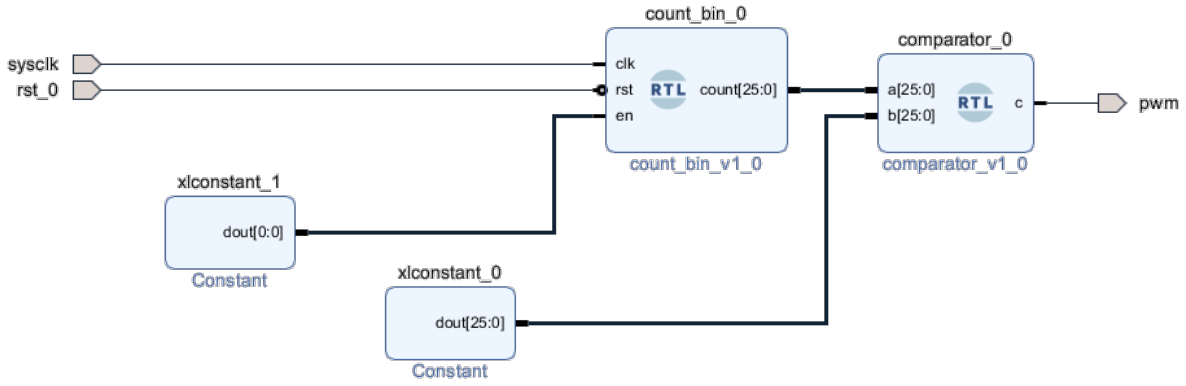

PWM application: Clock divider

- It provides an output clock signal that is a divided frequency of the input.
- It is a PWM signal with a 50% duty cycle.
- The previous exercise is a clock divider. It divided a clock of125MHz to 1Hz.
- Clock dividers are needed to align the input frequency with the desire operating frequency of an application or an interface.
  - For the digital clock assignment, 1Hz is the desired operating frequency of the circuit.